Radial Air Bearings
Product Specifications

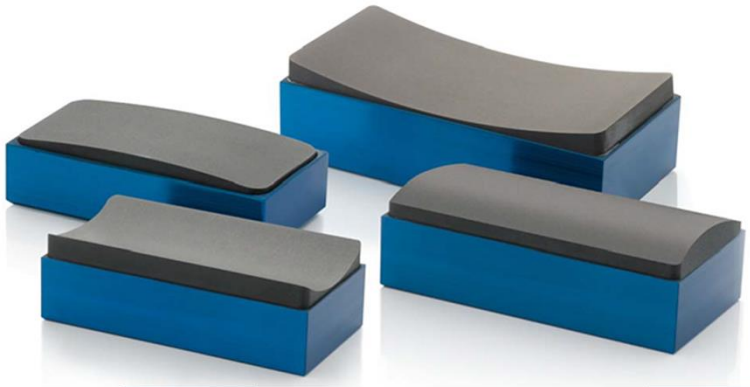

Specifications and Tolerancing Information for
Concave and Convex Configurations

Last update: 2021-02-19

Table of Contents

1	**RADIAL AIR BEARING LINE INFORMATION**	**3**
1.1	PRECISION ROTARY MOTION FOR CRITICAL APPLICATIONS	3
2	**CONCAVE RADIAL AIR BEARING LINE INFORMATION**	**5**
2.1	PRODUCT LINE DIMENSIONS – CONCAVE RADIAL AIR BEARINGS	5
2.2	PRODUCT LINE SPECIFICATIONS – CONCAVE RADIAL AIR BEARINGS	6
2.3	RECOMMENDED WIDTH RADIUS TOLERANCING – CONCAVE RADIAL AIR BEARINGS	7
2.4	RECOMMENDED LENGTH RADIUS TOLERANCING – CONCAVE RADIAL AIR BEARINGS	8
2.5	RECOMMENDED LENGTH RADIUS – CONCAVE RADIAL AIR BEARINGS	9
2.6	BEARING TO SHAFT RATIO – CONCAVE RADIAL AIR BEARINGS	10
2.7	EFFECTS OF TOLERANCING – CONCAVE RADIAL AIR BEARINGS	11
2.8	CONCAVE RADIAL AIR BEARINGS - TOLERANCING FACTOR = 0.00035	12
3	**CONVEX RADIAL AIR BEARING LINE INFORMATION**	**13**
3.1	PRODUCT LINE DIMENSIONS – CONVEX RADIAL AIR BEARINGS	13
3.2	PRODUCT LINE SPECIFICATIONS – CONVEX RADIAL AIR BEARINGS	14
3.3	RECOMMENDED WIDTH TOLERANCING – CONVEX RADIAL AIR BEARINGS	15
3.4	RECOMMENDED LENGTH TOLERANCING – CONVEX RADIAL AIR BEARINGS	16
3.5	BEARING TO BORE RATIO – CONVEX RADIAL AIR BEARINGS	17
3.6	EFFECTS OF TOLERANCING FACTOR CHANGES	18
3.7	TOLERANCING FACTOR = 0.00035	19
4	**RADIAL AIR BEARINGS - USES AND APPLICATION ILLUSTRATIONS WITH DETAILED DESCRIPTIONS**	**20**

Last update: 2021-02-19

1 Radial Air Bearing Line Information

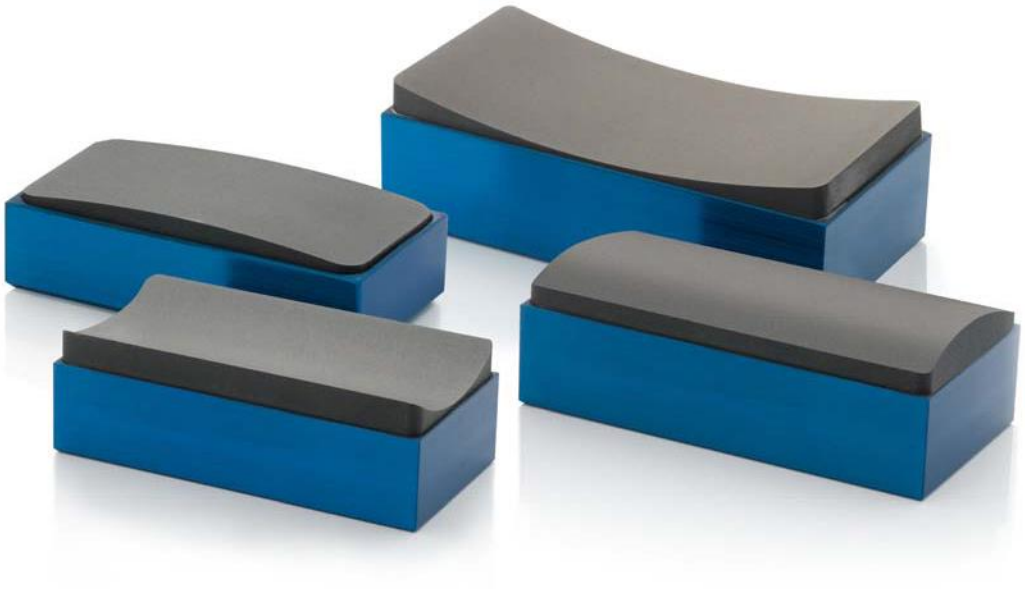

Figure 1 Radial Air Bearing Line

1.1 Precision Rotary Motion for Critical Applications

New Way introduces Radial Bearings to its range of Air Bearing products. In either concave or convex configurations, New Way Radial Air Bearings are ideal for rotary applications, giving you all the differential advantages of air bearings that you require: high speed, high precision, no friction, no wear, no need for lubrication, excellent velocity control, and no noise. These porous media air bearings ideal for a wide range of high-performance applications including inspection, imaging, wind power, turbo machinery, powder processing, centrifuge and many others.

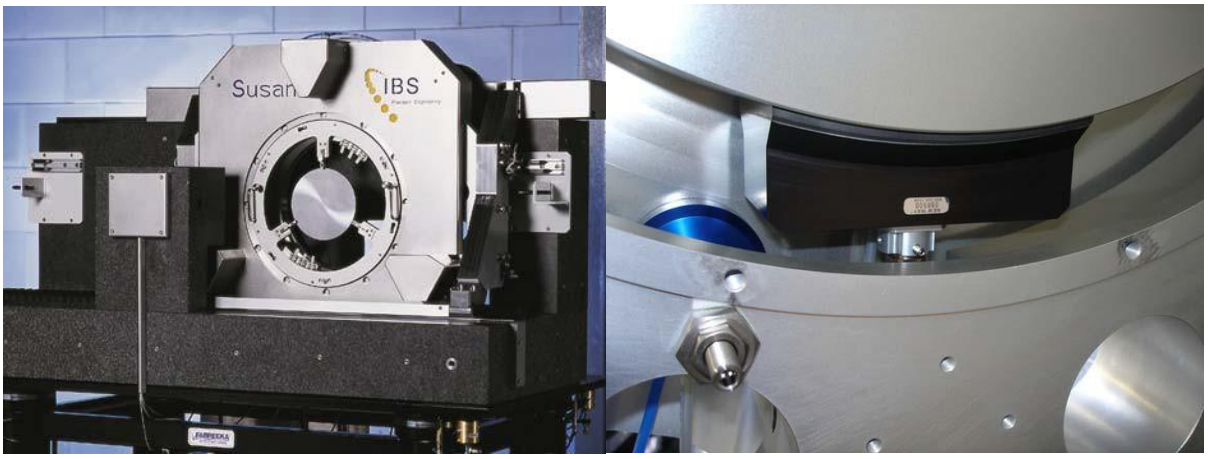

Figure 2 Left: IBS Precision Engineering's Susan Wafer Inspection Machine. Right: Uses New Way Concave Radial Air Bearings.

Last update: 2021-02-19

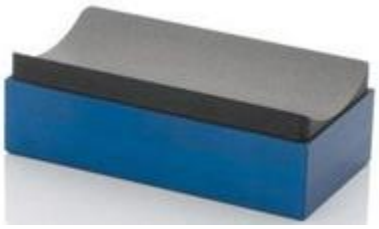

Figure 3 Concave Radial Air Bearing Line

Concave Radial Air Bearing Line

Ideal for rotary motion, New Way Concave Porous Media™ Radial Air Bearings are designed to maximize open-ID aperture by enabling you to engineer a supporting structure outside the rotating body.

Figure 4 Convex Radial Air Bearing Line

Convex Radial Air Bearing Line

Ideal for rotary motion, New Way Convex Porous Media™ Radial Air Bearings are designed to minimize the OD circumference, enabling you to engineer a supporting structure inside the rotating body.

Figure 5 New Way Porous Media™ Technology

The Advantages of Porous Media

Unlike conventional orifice compensation, New Way Porous Media Air Bearings control the airflow across the entire bearing surface. Millions of holes in the porous carbon material produce an ideal supply of uniform air pressure, while simultaneously restricting and damping the air flow. The carbon surface also provides greater bearing protection if there is an air supply failure, and allows the bearings to be moved during air failure without damaging the support surface.

Benefits of IBS Radial Air Bearings

- Large-scale rotary motion
- No contact
- No wear
- No noise
- No touchdown damage
- No need for lubrication
- High Speed
- High stiffness
- Averaging of guide surface errors
- Infinite resolution
- Sub-nanometer repeatability
- Excellent velocity control
- No vibration
- Robust
- Inexpensive
- Lower operation cost

Last update: 2021-02-19

2 Concave Radial Air Bearing Line Information

2.1 Product Line Dimensions – Concave Radial Air Bearings

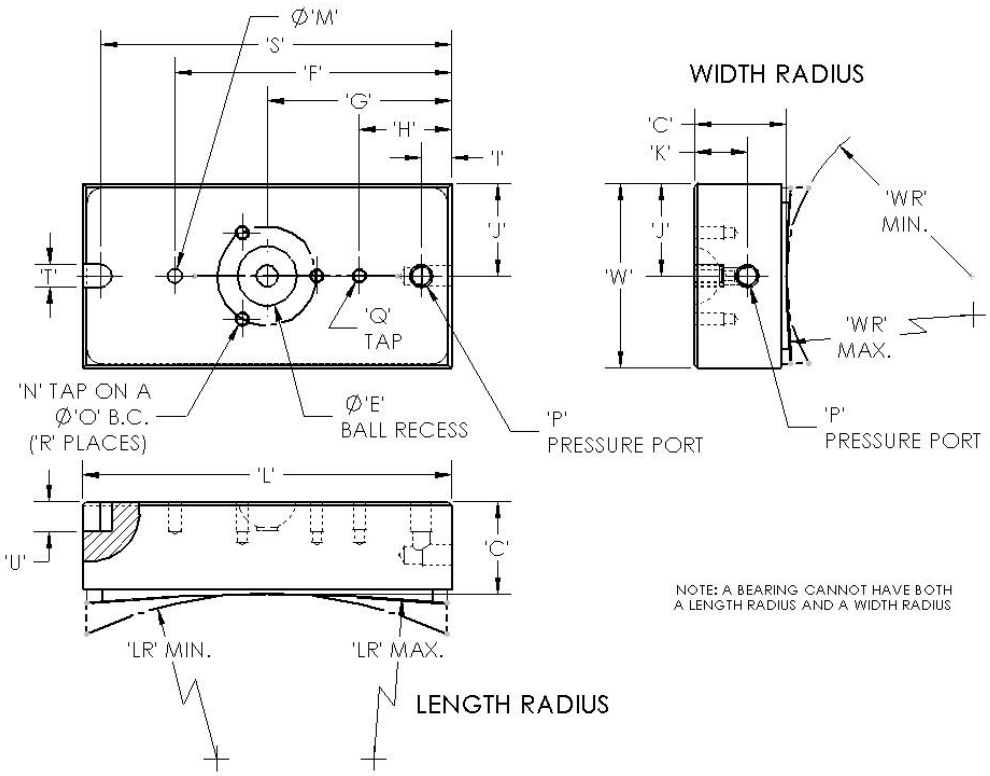

PART NUMBER		DIMENSIONS										
WIDTH RADIUS	LENGTH RADIUS	'W'	'L'	'WR' MIN.	'WR' MAX.	'LR' MIN	'LR' MAX.	'C'	'E'	'F'	'G'	'H'
S3212W***	S3212L***	12	24	12	60	24	120	10	6	N/A	12	N/A
S3215W***	S3215L***	15	30	15	75	30	150	10			15	
S3220W***	S3220L***	20	40	20	100	40	200	13	13		20	
S3225W***	S3225L***	25	50	25	125	50	250	17			25	
S3240W***	S3240L***	40	80	40	200	80	400	20		59.94	40	20
S3250W***	S3250L***	50	100	50	250	100	500	25		75	50	25
S3275W***	S3275L***	75	150	75	375	150	750	50	25	125	75	25
S32100W***	S32100L***	100	200	100	500	200	1000	70		175	100	N/A
S32125W***	S32125L***	125	250	125	625	250	1250	85		225	125	
S32150W***	S32150L***	150	300	150	750	300	1500	100		275	150	

PART NUMBER		DIMENSIONS												
WIDTH RADIUS	LENGTH RADIUS	'I'	'J'	'K'	'M'	'N' TAP	'O'	'P' TAP	'Q' TAP	'R'	'S'	'T'	'U'
S3212W***	S3212L***	N/A	6.0	3.3	N/A	M1.6 X 0.35	10.75	M3 X 0.5	N/A	2	22	2.5	2.5
S3215W***	S3215L***		7.5								28	2.5	2.5
S3220W***	S3220L***	7	10.0	6.3			18.00			4	37	4.0	4.0
S3225W***	S3225L***	8	12.5	10.3							47	4.0	4.0
S3240W***	S3240L***	7.62	20.0	11.5	3.18	M3 X 0.5	21.59	M5 X 0.8	M3 X 0.5	3	N/A	N/A	N/A
S3250W***	S3250L***	8.69	25.0	15.8									
S3275W***	S3275L***	N/A	37.5	36	6.35		38.10		M5 x 0.8				
S32100W***	S32100L***	25	50.0						N/A				
S32125W***	S32125L***		62.5										
S32150W***	S32150L***		75.0										

*Notes: -***In part number is bearing radius. -Tap holes 'N' quantity or orientation may not be as shown illustration.*

Last update: 2021-02-19

2.2 Product Line Specifications – Concave Radial Air Bearings

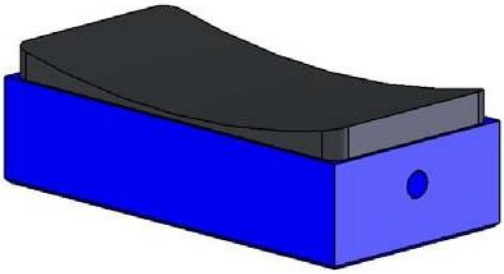

SIZE (MM)	LOAD @ 5 UM FLY HEIGHT (N)	STIFFNESS (N/UM)	FLOW (NLPM)	BALL SOCKET (MM)	BEARING HEIGHT (MM)	BEARING WEIGHT (GM)
12 X 24	22	5	0.40	6	10	6
15 X 30	44	7	1.18	6	10	8
20 X 40	89	14	1.89	6	13	24
25 X 50	156	22	2.36	6	17	48
40 X 80	445	58	4.25	13	20	145
50 X 100	801	110	4.72	13	25	295
75 X 150	1868	250	4.25	25	50	1372
100 X 200	4003	665	4.25	25	70	3628
125 X 250	6672	1009	4.96	25	75	6937
150 X 300	10453	1645	5.19	25	100	11822

Last update: 2021-02-19

2.3 Recommended Width Radius Tolerancing – Concave Radial Air Bearings

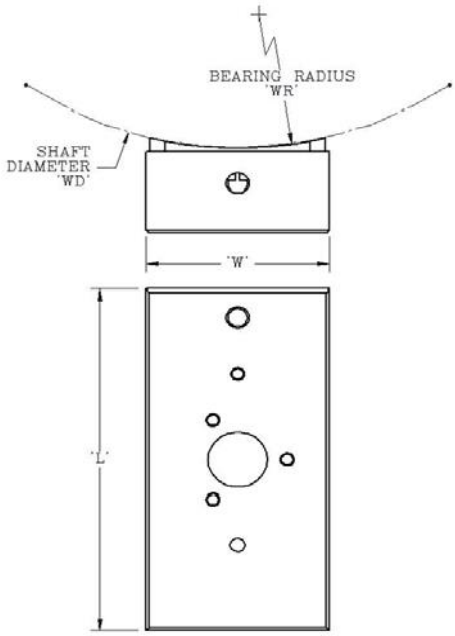

BEARING SIZE		MINIMUM RECOMMENDED SIZE		MAXIMUM RECOMMENDED SIZE	
		SHAFT DIAMETER ('WD' MIN.='W' X 2)	BEARING RADIUS (WR MIN.'='W' X 1)	SHAFT DIAMETER ('WD' MAX.='W' X 10)	BEARING RADIUS ('WR' MAX.='W' X 5)
'W'	'L'	'WD' MIN.	'WR' MIN.	'WD' MAX.	'WR' MAX.
12	24	24 + 0.0000 - 0.0084	12 + 0.0042 - 0.0000	120 + 0.0000 - 0.0420	60 + 0.0210 - 0.0000
15	30	30 + 0.0000 - 0.0105	15 + 0.0053 - 0.0000	150 + 0.0000 - 0.0525	75 + 0.0263 - 0.0000
20	40	40 + 0.0000 - 0.0140	20 + 0.0070 - 0.0000	200 + 0.0000 - 0.0700	100 + 0.0350 - 0.0000
25	50	50 + 0.0000 - 0.0175	25 + 0.0088 - 0.0000	250 + 0.0000 - 0.0875	125 + 0.0438 - 0.0000
40	80	80 + 0.0000 - 0.0280	40 + 0.0140 - 0.0000	400 + 0.0000 - 0.1400	200 + 0.0700 - 0.0000
50	100	100 + 0.0000 - 0.0350	50 + 0.0175 - 0.0000	500 + 0.0000 - 0.1750	250 + 0.0875 - 0.0000
75	150	150 + 0.0000 - 0.0525	75 + 0.0263 - 0.0000	750 + 0.0000 - 0.2625	375 + 0.1313 - 0.0000
100	200	200 + 0.0000 - 0.0700	100 + 0.0350 - 0.0000	1000 + 0.0000 - 0.3500	500 + 0.1750 - 0.0000
125	250	250 + 0.0000 - 0.0875	125 + 0.0438 - 0.0000	1250 + 0.0000 - 0.4375	625 + 0.2188 - 0.0000
150	300	300 + 0.0000 - 0.1050	150 + 0.0525 - 0.0000	1500 + 0.0000 - 0.5250	750 + 0.2625 - 0.0000

Notes:

- *All dimensions are in millimeters*
- *Recommended tolerancing factor ('TF'):*
  - *0.00035*
- *To calculate tolerance for specific shaft size:*
  - *Shaft diameter tolerance = + 0.0000 / -'WD' X 'TF'*
  - *Bearing radius tolerance = + ('WD' / 2) X 'TF' / - 0.0000*
- *The tolerancing factor may be increased or decreased as required. Consult IBS for more information.*

Last update: 2021-02-19

2.4 Recommended Length Radius Tolerancing – Concave Radial Air Bearings

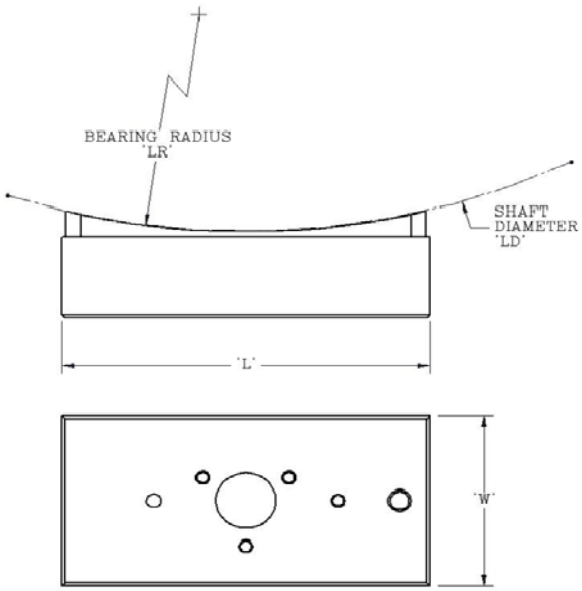

BEARING SIZE		MINIMUM RECOMMENDED SIZE ('L' X 1)		MAXIMUM RECOMMENDED SIZE ('L' X 5)	
		SHAFT DIAMETER	BEARING RADIUS	SHAFT DIAMETER	BEARING RADIUS
		('LD' MIN.='L' X 2)	(LR' MIN.='L'X1)	('LD' MAX.='L' X 10)	('LR' MAX.='L'X5)
'W'	'L'	'LD' MIN.	'LR' MIN.	'LD' MAX.	'LR' MAX
12	24	48 + 0.0000 - 0.0168	24 + 0.0084 - 0.0000	240 + 0.0000 - 0.0840	120 + 0.0420 - 0.0000
15	30	60 + 0.0000 - 0.0210	30 + 0.0105 - 0.0000	300 + 0.0000 - 0.1050	150 + 0.0525 - 0.0000
20	40	80 + 0.0000 - 0.0280	40 + 0.0140 - 0.0000	400 + 0.0000 - 0.1400	200 + 0.0700 - 0.0000
25	50	100 + 0.0000 - 0.0350	50 + 0.0175 - 0.0000	500 + 0.0000 - 0.1750	250 + 0.0875 - 0.0000
40	80	160 + 0.0000 - 0.0560	80 + 0.0280 - 0.0000	800 + 0.0000 - 0.2800	400 + 0.1400 - 0.0000
50	100	200 + 0.0000 - 0.0700	100 + 0.0350 - 0.0000	1000 + 0.0000 - 0.3500	500 + 0.1750 - 0.0000
75	150	300 + 0.0000 - 0.1050	150 + 0.0525 - 0.0000	1500 + 0.0000 - 0.5250	750 + 0.2625 - 0.0000
100	200	400 + 0.0000 - 0.1400	200 + 0.0700 - 0.0000	2000 + 0.0000 - 0.7000	1000 + 0.3500 - 0.0000
125	250	500 + 0.0000 - 0.1750	250 + 0.0875 - 0.0000	2500 + 0.0000 - 0.8750	1250 + 0.4375 - 0.0000
150	300	600 + 0.0000 - 0.2100	300 + 0.1050 - 0.0000	3000 + 0.0000 - 1.0500	1500 + 0.5250 - 0.0000

Notes:

- *All dimensions are in millimeters*
- *Recommended tolerancing factor ('TF')*
  - *0.00035*
- *To calculate tolerance for specific shaft size ('LD'):*
  - *Shaft diameter tolerance = + 0.0000 / - 'LD' X 'TF'*
  - *Bearing radius tolerance = + ('LD' / 2) X 'TF' / - 0.0000*
- *The tolerancing factor may be increased or decreased as required. Consult IBS for more information.*

Last update: 2021-02-19

2.5 Recommended Length Radius – Concave Radial Air Bearings

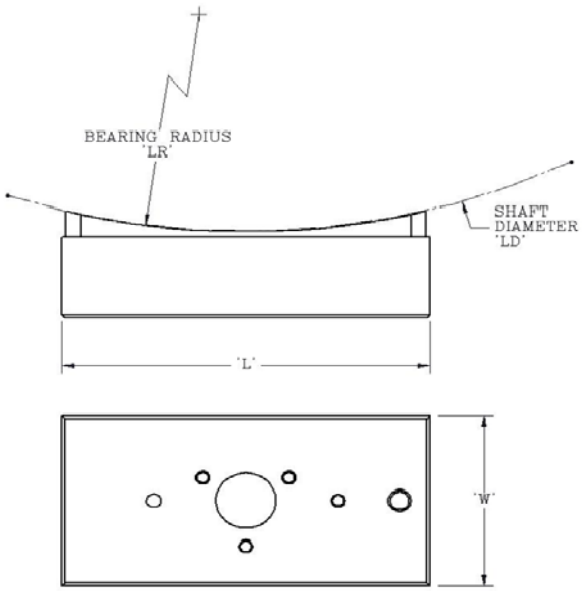

BEARING SIZE		MINIMUM RECOMMENDED SIZE ('L' X 1)		MAXIMUM RECOMMENDED SIZE ('L' X 5)	
		SHAFT DIAMETER	BEARING RADIUS	SHAFT DIAMETER	BEARING RADIUS
		('LD' MIN.='L' X 2)	(LR' MIN.='L'X1)	('LD' MAX.='L' X 10)	('LR' MAX.='L'X5)
'W'	'L'	'LD' MIN.	'LR' MIN.	'LD' MAX.	'LR' MAX
12	24	48 + 0.0000 - 0.0168	24 + 0.0084 - 0.0000	240 + 0.0000 - 0.0840	120 + 0.0420 - 0.0000
15	30	60 + 0.0000 - 0.0210	30 + 0.0105 - 0.0000	300 + 0.0000 - 0.1050	150 + 0.0525 - 0.0000
20	40	80 + 0.0000 - 0.0280	40 + 0.0140 - 0.0000	400 + 0.0000 - 0.1400	200 + 0.0700 - 0.0000
25	50	100 + 0.0000 - 0.0350	50 + 0.0175 - 0.0000	500 + 0.0000 - 0.1750	250 + 0.0875 - 0.0000
40	80	160 + 0.0000 - 0.0560	80 + 0.0280 - 0.0000	800 + 0.0000 - 0.2800	400 + 0.1400 - 0.0000
50	100	200 + 0.0000 - 0.0700	100 + 0.0350 - 0.0000	1000 + 0.0000 - 0.3500	500 + 0.1750 - 0.0000
75	150	300 + 0.0000 - 0.1050	150 + 0.0525 - 0.0000	1500 + 0.0000 - 0.5250	750 + 0.2625 - 0.0000
100	200	400 + 0.0000 - 0.1400	200 + 0.0700 - 0.0000	2000 + 0.0000 - 0.7000	1000 + 0.3500 - 0.0000
125	250	500 + 0.0000 - 0.1750	250 + 0.0875 - 0.0000	2500 + 0.0000 - 0.8750	1250 + 0.4375 - 0.0000
150	300	600 + 0.0000 - 0.2100	300 + 0.1050 - 0.0000	3000 + 0.0000 - 1.0500	1500 + 0.5250 - 0.0000

Notes:

- *All dimensions are in millimeters*
- *Recommended tolerancing factor ('TF'):*
  - *0.00035*
- *To calculate tolerance for specific shaft size ('LD')"*
  - *Shaft diameter tolerance = + 0.0000 / - 'LD' X 'TF'*
  - *Bearing radius tolerance = + ('LD' / 2) X 'TF' / - 0.0000*
- *The tolerancing factor may be increased or decreased as required. Consult IBS for more information.*

Last update: 2021-02-19

2.6 Bearing to Shaft Ratio – Concave Radial Air Bearings

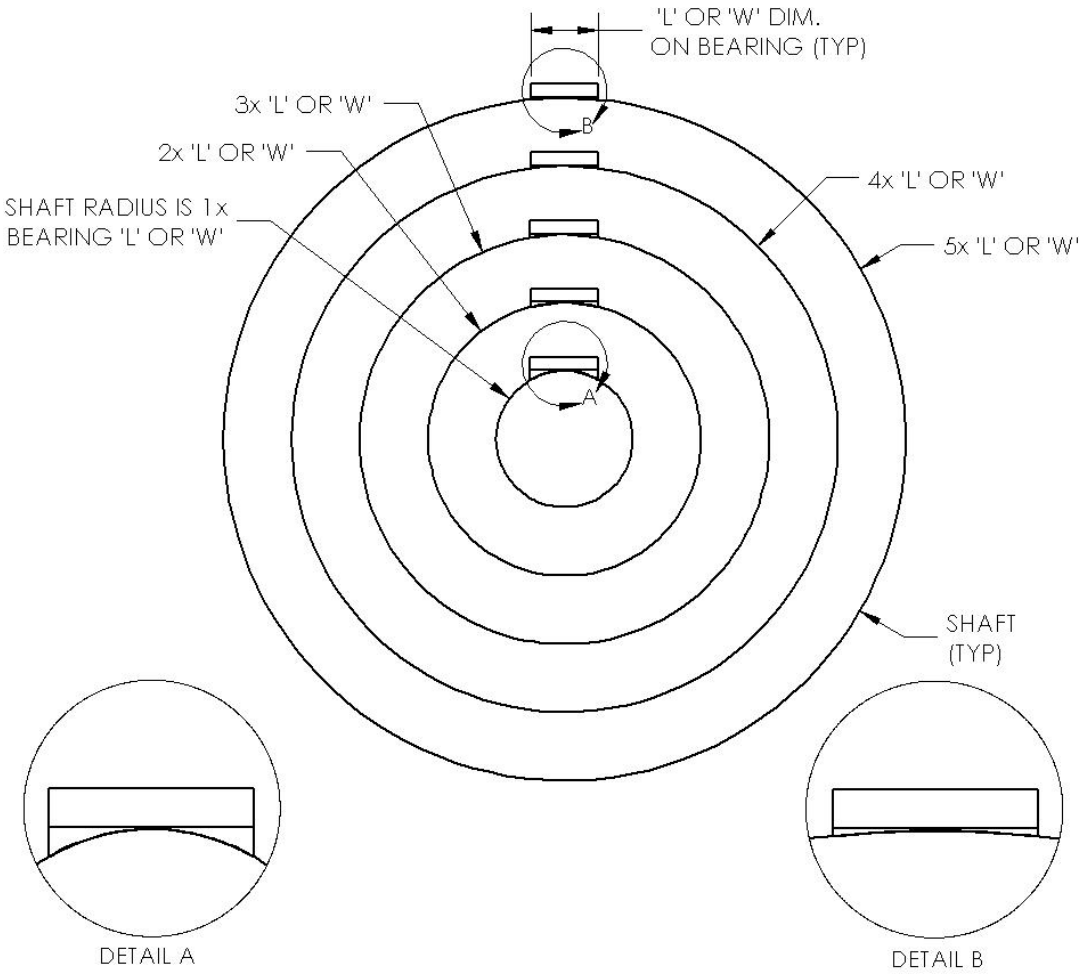

Last update: 2021-02-19

2.7 Effects of tolerancing – Concave Radial Air Bearings

The Tolerancing Factor is used to generate the manufacturing tolerances for the shaft diameter and bearing radius. The table below illustrates the effect of changes in the tolerancing factor to the gaps at the ends of the radial bearing under worst-case conditions.

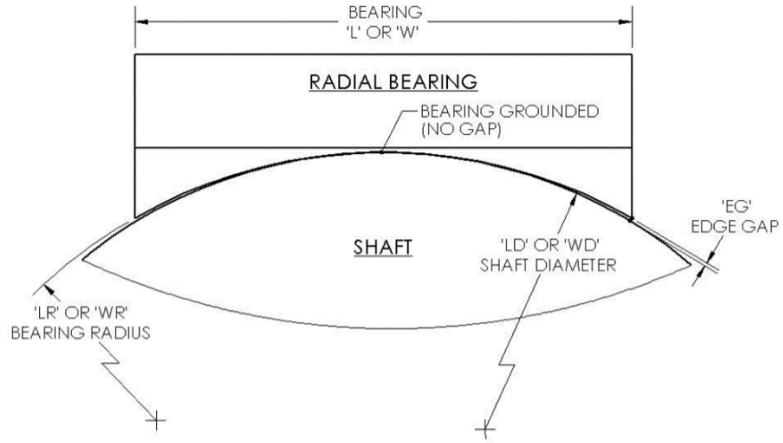

Notes:

- *All dimensions are in millimeters*
- *For any given bearing size and tolerancing factor, the edge gap ('EG') dimension will increase at the shaft diameter decreases. In the table above the nominal shaft diameter is the minimum diameter recommended for use with the chosen bearing size.*
- *Shaft diameters 'WD' and 'LD' are the minimum size allowed for each given tolerancing factor*
- *Bearing radius 'WR' and 'LR' are the maximum size allowed for each given tolerancing factor*

TOLERANCING FACTOR	BEARING WIDTH	SHAFT DIAMETER	BEARING RADIUS	EDGE GAP
'TF'	'W'	'WD'	'WR'	'EG'
0.00010	12	23.9976	12.0012	0.00032
0.00015		23.9964	12.0018	0.00048
0.00020		23.9952	12.0024	0.00064
0.00025		23.9940	12.0030	0.00080
0.00030		23.9928	12.0036	0.00096
0.00035		23.9916	12.0042	0.00113
0.00040		23.9904	12.0048	0.00129
0.00045		23.9892	12.0054	0.00145
0.00050		23.9880	12.0060	0.00161

TOLERANCING FACTOR	BEARING LENGTH	SHAFT DIAMETER	BEARING RADIUS	EDGE GAP
'TF'	'L'	'LD'	'LR'	'EG'
0.00010	300	599.9400	300.0300	0.00804
0.00015		599.9100	300.0450	0.01206
0.00020		599.8800	300.0600	0.01608
0.00025		599.8500	300.0750	0.02009
0.00030		599.8200	300.0900	0.02411
0.00035		599.7900	300.1050	0.02813
0.00040		599.7600	300.1200	0.03215
0.00045		599.7300	300.1350	0.03617
0.00050		599.7000	300.1500	0.04019

Last update: 2021-02-19

2.8 Concave Radial Air Bearings - Tolerancing Factor = 0.00035

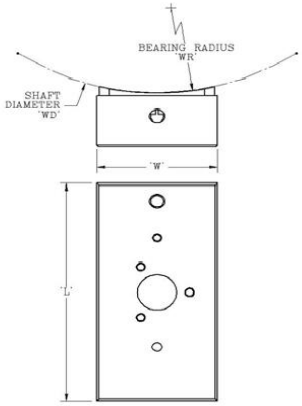

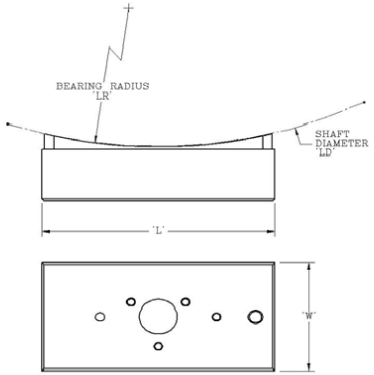

BEARING SIZE		MINIMUM RECOMMENDED SIZE				MAXIMUM RECOMMENDED SIZE			
		SHAFT DIAMETER		BEARING RADIUS		SHAFT DIAMETER		BEARING RADIUS	
		('WD' MIN.='W' X 2)		(WR MIN.'='W' X 1)		('WD' MAX.='W' X 10)		('WR' MAX.='W' X 5)	
'W'	'L'	'WD' MIN.		'WR' MIN.		'WD' MAX.		'WR' MAX.	
12	24	24	+ 0.0000 - 0.0084	12	+ 0.0042 - 0.0000	120	+ 0.0000 - 0.0420	60	+ 0.0210 - 0.0000
15	30	30	+ 0.0000 - 0.0105	15	+ 0.0053 - 0.0000	150	+ 0.0000 - 0.0525	75	+ 0.0263 - 0.0000
20	40	40	+ 0.0000 - 0.0140	20	+ 0.0070 - 0.0000	200	+ 0.0000 - 0.0700	100	+ 0.0350 - 0.0000
25	50	50	+ 0.0000 - 0.0175	25	+ 0.0088 - 0.0000	250	+ 0.0000 - 0.0875	125	+ 0.0438 - 0.0000
40	80	80	+ 0.0000 - 0.0280	40	+ 0.0140 - 0.0000	400	+ 0.0000 - 0.1400	200	+ 0.0700 - 0.0000
50	100	100	+ 0.0000 - 0.0350	50	+ 0.0175 - 0.0000	500	+ 0.0000 - 0.1750	250	+ 0.0875 - 0.0000
75	150	150	+ 0.0000 - 0.0525	75	+ 0.0263 - 0.0000	750	+ 0.0000 - 0.2625	375	+ 0.1313 - 0.0000
100	200	200	+ 0.0000 - 0.0700	100	+ 0.0350 - 0.0000	1000	+ 0.0000 - 0.3500	500	+ 0.1750 - 0.0000
125	250	250	+ 0.0000 - 0.0875	125	+ 0.0438 - 0.0000	1250	+ 0.0000 - 0.4375	625	+ 0.2188 - 0.0000
150	300	300	+ 0.0000 - 0.1050	150	+ 0.0525 - 0.0000	1500	+ 0.0000 - 0.5250	750	+ 0.2625 - 0.0000

BEARING SIZE		MINIMUM RECOMMENDED SIZE ('L' X 1)				MAXIMUM RECOMMENDED SIZE ('L' X 5)			
		SHAFT DIAMETER		BEARING RADIUS		SHAFT DIAMETER		BEARING RADIUS	
		('LD' MIN.='L' X 2)		(LR' MIN.='L'X1)		('LD' MAX.='L' X 10)		('LR' MAX.='L'X5)	
'W'	'L'	'LD' MIN.		'LR' MIN.		'LD' MAX.		'LR' MAX	
12	24	48	+ 0.0000 - 0.0168	24	+ 0.0084 - 0.0000	240	+ 0.0000 - 0.0840	120	+ 0.0420 - 0.0000
15	30	60	+ 0.0000 - 0.0210	30	+ 0.0105 - 0.0000	300	+ 0.0000 - 0.1050	150	+ 0.0525 - 0.0000
20	40	80	+ 0.0000 - 0.0280	40	+ 0.0140 - 0.0000	400	+ 0.0000 - 0.1400	200	+ 0.0700 - 0.0000
25	50	100	+ 0.0000 - 0.0350	50	+ 0.0175 - 0.0000	500	+ 0.0000 - 0.1750	250	+ 0.0875 - 0.0000
40	80	160	+ 0.0000 - 0.0560	80	+ 0.0280 - 0.0000	800	+ 0.0000 - 0.2800	400	+ 0.1400 - 0.0000
50	100	200	+ 0.0000 - 0.0700	100	+ 0.0350 - 0.0000	1000	+ 0.0000 - 0.3500	500	+ 0.1750 - 0.0000
75	150	300	+ 0.0000 - 0.1050	150	+ 0.0525 - 0.0000	1500	+ 0.0000 - 0.5250	750	+ 0.2625 - 0.0000
100	200	400	+ 0.0000 - 0.1400	200	+ 0.0700 - 0.0000	2000	+ 0.0000 - 0.7000	1000	+ 0.3500 - 0.0000
125	250	500	+ 0.0000 - 0.1750	250	+ 0.0875 - 0.0000	2500	+ 0.0000 - 0.8750	1250	+ 0.4375 - 0.0000
150	300	600	+ 0.0000 - 0.2100	300	+ 0.1050 - 0.0000	3000	+ 0.0000 - 1.0500	1500	+ 0.5250 - 0.0000

Last update: 2021-02-19

3 Convex Radial Air Bearing Line Information

3.1 Product Line Dimensions – Convex Radial Air Bearings

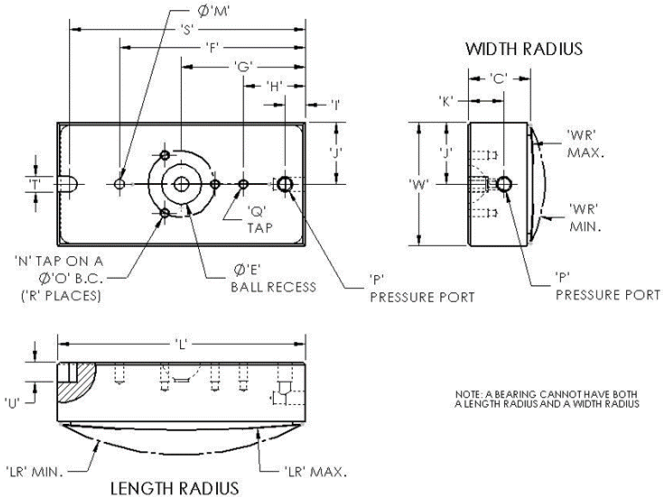

PART NUMBER		DIMENSIONS										
WIDTH RADIUS	LENGTH RADIUS	'W'	'L'	'WR' MIN.	'WR' MAX.	'LR' MIN	'LR' MAX.	'C'	'E'	'F'	'G'	'H'
S3312W***	S3312L***	12	24	12	60	24	120	10	6	N/A	12	N/A
S3315W***	S3315L***	15	30	15	75	30	150	10			15	
S3320W***	S3320L***	20	40	20	100	40	200	13	13		20	
S3325W***	S3325L***	25	50	25	125	50	250	17			25	
S3340W***	S3340L***	40	80	40	200	80	400	20		59.94	40	20
S3350W***	S3350L***	50	100	50	250	100	500	25		75	50	25
S3375W***	S3375L***	75	150	75	375	150	750	50	25	125	75	25
S33100W***	S33100L***	100	200	100	500	200	1000	70		175	100	N/A
S33125W***	S33125L***	125	250	125	625	250	1250	85		225	125	
S33150W***	S33150L***	150	300	150	750	300	1500	100		275	150	

PART NUMBER		DIMENSIONS											
WIDTH RADIUS	LENGTH RADIUS	'I'	'J'	'K'	'M'	'N' TAP	'O'	'P' TAP	'Q' TAP	'R'	'S'	'T'	'U'
S3312W***	S3312L***	N/A	6.0	3.3	N/A	M1.6 X 0.35	10.75	M3 X 0.5	N/A	2	22	2.5	2.5
S3315W***	S3315L***		7.5								28	2.5	2.5
S3320W***	S3320L***	7	10.0	6.3			18.00			4	37	4.0	4.0
S3325W***	S3325L***	8	12.5	10.3							47	4.0	4.0
S3340W***	S3340L***	7.62	20.0	11.5	3.175	M3 X 0.5	21.59	M5 X 0.8	M3 X 0.5	3	N/A	N/A	N/A
S3350W***	S3350L***	8.69	25.0	15.8									
S3375W***	S3375L***	N/A	37.5	36	6.35		38.10		M5 X 0.8				
S33100W***	S33100L***	25	50.0						N/A				
S33125W***	S33125L***		62.5										
S33150W***	S33150L***		75.0										

Notes:

- **** in part number is bearing radius*
- *Tap holes 'N' quantity or orientation may not be as shown illustration*

Last update: 2021-02-19

3.2 Product Line Specifications – Convex Radial Air Bearings

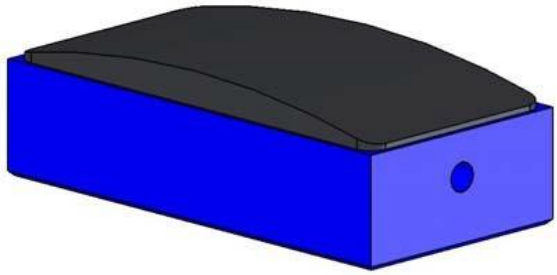

SIZE (MM)	LOAD @ 5 UM FLY HEIGHT (N)	STIFFNESS (N/UM)	FLOW (NLPM)	BALL SOCKET (MM)	BEARING HEIGHT (MM)	BEARING WEIGHT (GM)
12 X 24	22	5	0.40	6	10	6
15 X 30	44	7	1.18	6	10	8
20 X 40	89	14	1.89	6	13	24
25 X 50	156	22	2.36	6	17	48
40 X 80	445	58	4.25	13	20	145
50 X 100	801	110	4.72	13	25	295
75 X 150	1868	250	4.25	25	50	1372
100 X 200	4003	665	4.25	25	70	3628
125 X 250	6672	1009	4.96	25	75	6937
150 X 300	10453	1645	5.19	25	100	11822

Last update: 2021-02-19

3.3 Recommended Width Tolerancing – Convex Radial Air Bearings

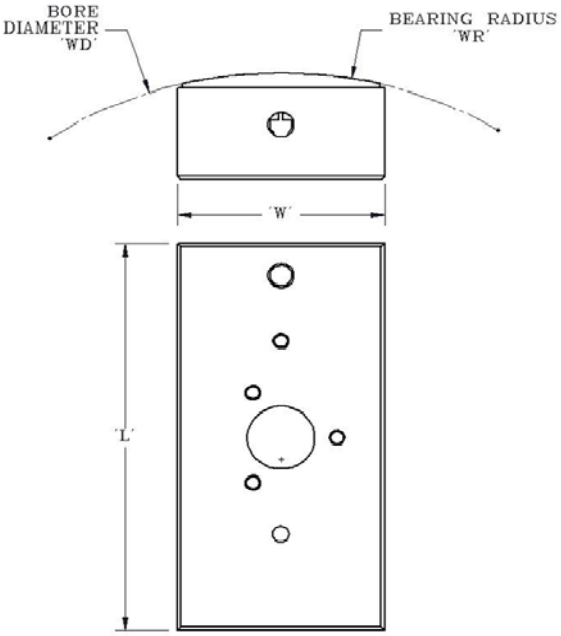

BEARING SIZE		MINIMUM RECOMMENDED SIZE		MAXIMUM RECOMMENDED SIZE	
		BORE DIAMETER ('WD' MIN.='W' X 2)	BEARING RADIUS (WR MIN.'='W' X 1)	BORE DIAMETER ('WD' MAX.='W' X 10)	BEARING RADIUS ('WR' MAX.='W' X 5)
'W'	'L'	'WD' MIN.	'WR' MIN.	'WD' MAX.	'WR' MAX.
12	24	24 + 0.0084 - 0.0000	12 + 0.0000 - 0.0042	120 + 0.0420 - 0.0000	60 + 0.0000 - 0.0210
15	30	30 + 0.0105 - 0.0000	15 + 0.0000 - 0.0053	150 + 0.0525 - 0.0000	75 + 0.0000 - 0.0263
20	40	40 + 0.0140 - 0.0000	20 + 0.0000 - 0.0070	200 + 0.0700 - 0.0000	100 + 0.0000 - 0.0350
25	50	50 + 0.0175 - 0.0000	25 + 0.0000 - 0.0088	250 + 0.0875 - 0.0000	125 + 0.0000 - 0.0438
40	80	80 + 0.0280 - 0.0000	40 + 0.0000 - 0.0140	400 + 0.1400 - 0.0000	200 + 0.0000 - 0.0700
50	100	100 + 0.0350 - 0.0000	50 + 0.0000 - 0.0175	500 + 0.1750 - 0.0000	250 + 0.0000 - 0.0875
75	150	150 + 0.0525 - 0.0000	75 + 0.0000 - 0.0263	750 + 0.2625 - 0.0000	375 + 0.0000 - 0.1313
100	200	200 + 0.0700 - 0.0000	100 + 0.0000 - 0.0350	1000 + 0.3500 - 0.0000	500 + 0.0000 - 0.1750
125	250	250 + 0.0875 - 0.0000	125 + 0.0000 - 0.0438	1250 + 0.4375 - 0.0000	625 + 0.0000 - 0.2188
150	300	300 + 0.1050 - 0.0000	150 + 0.0000 - 0.0525	1500 + 0.5250 - 0.0000	750 + 0.0000 - 0.2625

Notes:

- *All dimensions are in millimeters*
- *Recommended tolerancing factor ('TF'):*
  - *0.00035*
- *To calculate tolerance for specific bore size ('WD'):*
  - *Bore diameter tolerance = + 'WD' X 'TF' / - 0.0000*
  - *Bearing radius tolerance = + 0.0000 / - ('WD' / 2) X 'TF'*
- *The tolerancing factor may be increased or decreased as required. Consult IBS for more information*

Last update: 2021-02-19

3.4 Recommended Length Tolerancing – Convex Radial Air Bearings

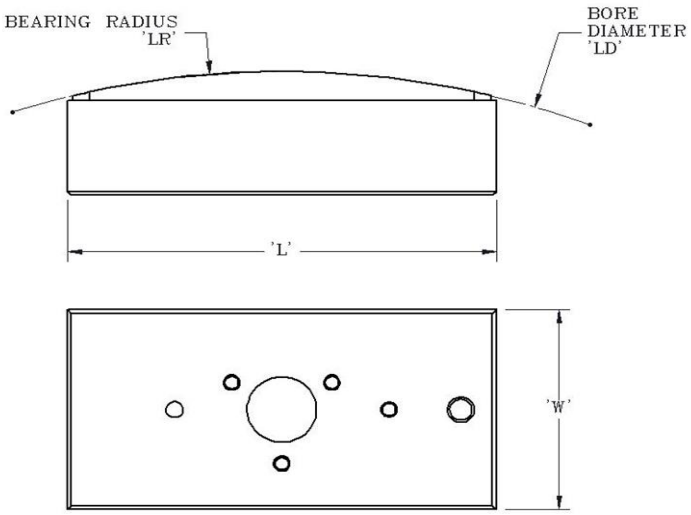

BEARING SIZE		MINIMUM RECOMMENDED SIZE ('L' X 1)				MAXIMUM RECOMMENDED SIZE ('L' X 5)			
		BORE DIAMETER ('LD' MIN.='L' X 2)		BEARING RADIUS (LR' MIN.='L'X1)		BORE DIAMETER ('LD' MAX.='L' X 10)		BEARING RADIUS ('LR' MAX.='L'X5)	
'W'	'L'	'LD' MIN.		'LR' MIN.		'LD' MAX.		'LR' MAX	
12	24	48	+ 0.0168 - 0.0000	24	+ 0.0000 - 0.0084	240	+ 0.0840 - 0.0000	120	+ 0.0000 - 0.0420
15	30	60	+ 0.0210 - 0.0000	30	+ 0.0000 - 0.0105	300	+ 0.1050 - 0.0000	150	+ 0.0000 - 0.0525
20	40	80	+ 0.0280 - 0.0000	40	+ 0.0000 - 0.0140	400	+ 0.1400 - 0.0000	200	+ 0.0000 - 0.0700
25	50	100	+ 0.0350 - 0.0000	50	+ 0.0000 - 0.0175	500	+ 0.1750 - 0.0000	250	+ 0.0000 - 0.0875
40	80	160	+ 0.0560 - 0.0000	80	+ 0.0000 - 0.0280	800	+ 0.2800 - 0.0000	400	+ 0.0000 - 0.1400
50	100	200	+ 0.0700 - 0.0000	100	+ 0.0000 - 0.0350	1000	+ 0.3500 - 0.0000	500	+ 0.0000 - 0.1750
75	150	300	+ 0.1050 - 0.0000	150	+ 0.0000 - 0.0525	1500	+ 0.5250 - 0.0000	750	+ 0.0000 - 0.2625
100	200	400	+ 0.1400 - 0.0000	200	+ 0.0000 - 0.0700	2000	+ 0.7000 - 0.0000	1000	+ 0.0000 - 0.3500
125	250	500	+ 0.1750 - 0.0000	250	+ 0.0000 - 0.0875	2500	+ 0.8750 - 0.0000	1250	+ 0.0000 - 0.4375
150	300	600	+ 0.2100 - 0.0000	300	+ 0.0000 - 0.1050	3000	+ 1.0500 - 0.0000	1500	+ 0.0000 - 0.5250

Notes:

- *All dimensions are in millimeters*
- *Recommended tolerancing factor ('TF'):*
  - *0.00035*
- *To calculate tolerance for specific bore size ('LD'):*
  - *Bore diameter tolerance = + 0.0000 / - 'LD' X 'TF'*
  - *Bearing radius tolerance = + ('LD' / 2) X 'TF' / - 0.0000*
- *The tolerancing factor may be increased or decreased as required. Consult IBS for more information.*

Last update: 2021-02-19

3.5 Bearing to Bore Ratio – Convex Radial Air Bearings

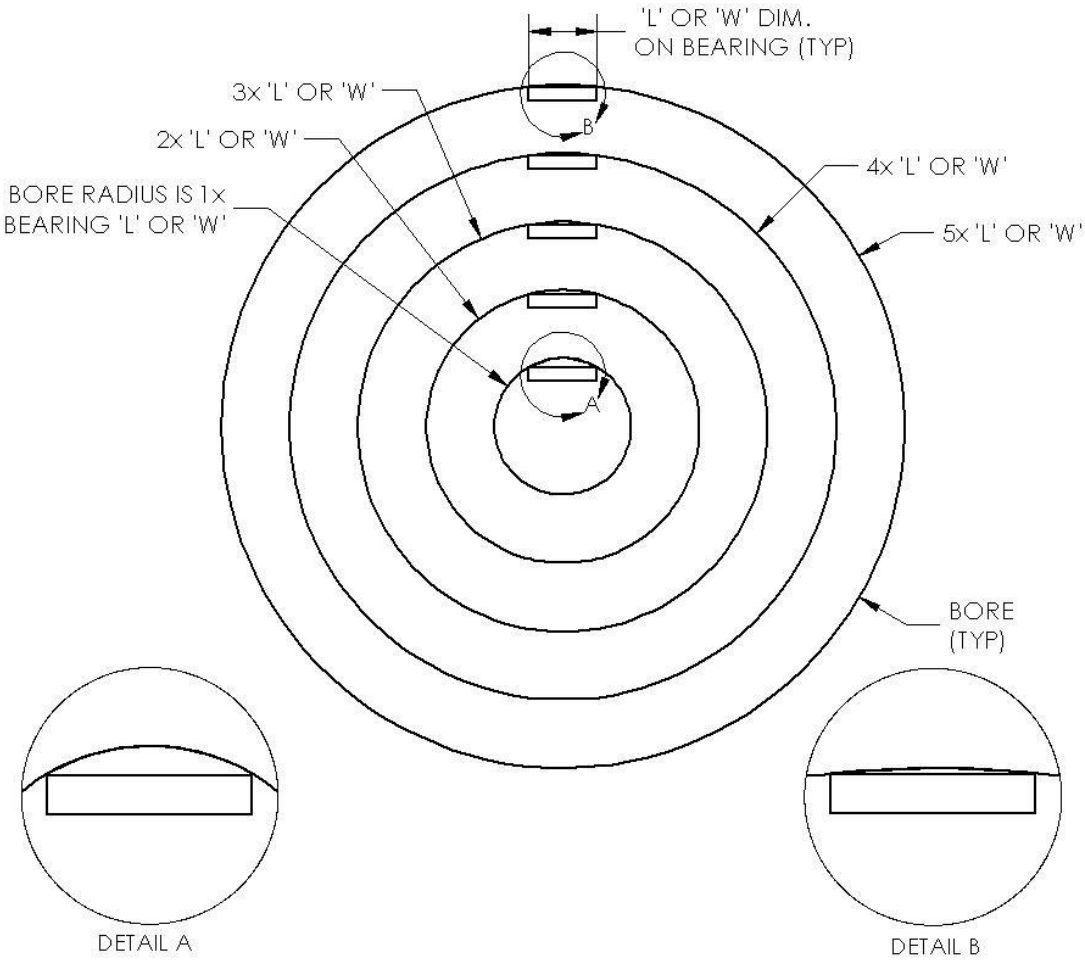

Last update: 2021-02-19

3.6 Effects of tolerancing factor changes

The Tolerancing Factor is used to generate the manufacturing tolerances for the bore diameter and bearing radius. The table below illustrates the effect of changes in the tolerancing factor to the gaps at the ends of the radial bearing under worst-case conditions.

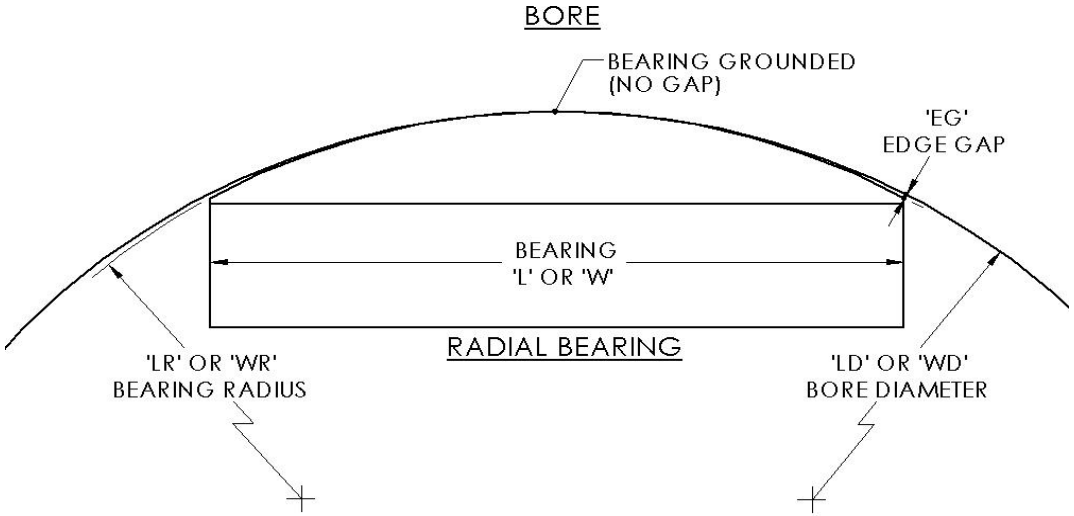

Table 1 Smallest Bearing Size & Table 2: Largest Bearing Size

TOLERANCING FACTOR	BEARING WIDTH	BORE DIAMETER	BEARING RADIUS	EDGE GAP
'TF'	'W'	'WD'	'WR'	'EG'
0.00010	12	24.0024	11.9988	0.00032
0.00015		24.0036	11.9982	0.00048
0.00020		24.0048	11.9976	0.00064
0.00025		24.0060	11.9970	0.00080
0.00030		24.0072	11.9964	0.00096
0.00035		24.0084	11.9958	0.00113
0.00040		24.0096	11.9952	0.00129
0.00045		24.0108	11.9946	0.00145
0.00050		24.0120	11.9940	0.00161

TOLERANCING FACTOR	BEARING LENGTH	BORE DIAMETER	BEARING RADIUS	EDGE GAP
'TF'	'L'	'LD'	'LR'	'EG'
0.00010	300	600.0600	299.9700	0.00804
0.00015		600.0900	299.9550	0.01206
0.00020		600.1200	299.9400	0.01608
0.00025		600.1500	299.9250	0.02009
0.00030		600.1800	299.9100	0.02411
0.00035		600.2100	299.8950	0.02813
0.00040		600.2400	299.8800	0.03215
0.00045		600.2700	299.8650	0.03617
0.00050		600.3000	299.8500	0.04019

Notes:

- *All dimensions are in millimeters*
- *For any given bearing size and tolerancing factor, the edge gap ('EG') dimension will increase as the bore diameter decreases. In the table above the nominal bore diameter is the minimum diameter recommended for use with the chosen bearing size.*
- *Bore diameters 'WD' and 'LD' are the maximum size allowed for each given tolerancing factor.*
- *Bearing radius 'WR' and 'LR' are the minimum size allowed for each given tolerancing factor.*

Last update: 2021-02-19

3.7 Tolerancing Factor = 0.00035

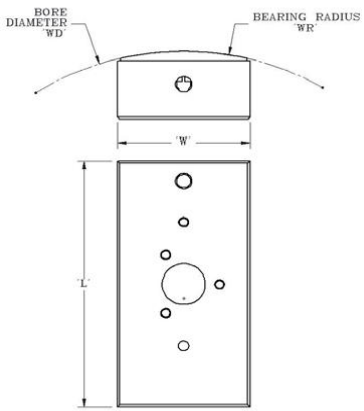

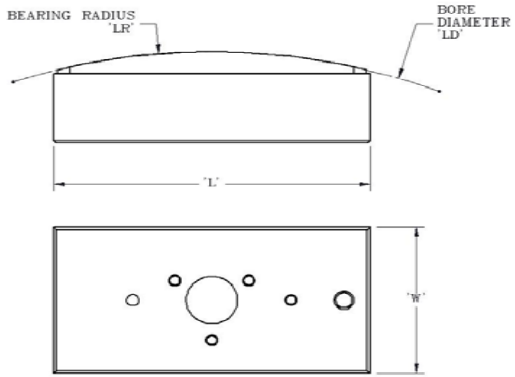

BEARING SIZE		MINIMUM RECOMMENDED SIZE		MAXIMUM RECOMMENDED SIZE	
		BORE DIAMETER ('WD' MIN.='W' X 2)	BEARING RADIUS (WR MIN.'='W' X 1)	BORE DIAMETER ('WD' MAX.='W' X 10)	BEARING RADIUS ('WR' MAX.='W' X 5)
'W'	'L'	'WD' MIN.	'WR' MIN.	'WD' MAX.	'WR' MAX.
12	24	24 + 0.0084 - 0.0000	12 + 0.0000 - 0.0042	120 + 0.0420 - 0.0000	60 + 0.0000 - 0.0210
15	30	30 + 0.0105 - 0.0000	15 + 0.0000 - 0.0053	150 + 0.0525 - 0.0000	75 + 0.0000 - 0.0263
20	40	40 + 0.0140 - 0.0000	20 + 0.0000 - 0.0070	200 + 0.0700 - 0.0000	100 + 0.0000 - 0.0350
25	50	50 + 0.0175 - 0.0000	25 + 0.0000 - 0.0088	250 + 0.0875 - 0.0000	125 + 0.0000 - 0.0438
40	80	80 + 0.0280 - 0.0000	40 + 0.0000 - 0.0140	400 + 0.1400 - 0.0000	200 + 0.0000 - 0.0700
50	100	100 + 0.0350 - 0.0000	50 + 0.0000 - 0.0175	500 + 0.1750 - 0.0000	250 + 0.0000 - 0.0875
75	150	150 + 0.0525 - 0.0000	75 + 0.0000 - 0.0263	750 + 0.2625 - 0.0000	375 + 0.0000 - 0.1313
100	200	200 + 0.0700 - 0.0000	100 + 0.0000 - 0.0350	1000 + 0.3500 - 0.0000	500 + 0.0000 - 0.1750
125	250	250 + 0.0875 - 0.0000	125 + 0.0000 - 0.0438	1250 + 0.4375 - 0.0000	625 + 0.0000 - 0.2188
150	300	300 + 0.1050 - 0.0000	150 + 0.0000 - 0.0525	1500 + 0.5250 - 0.0000	750 + 0.0000 - 0.2625

BEARING SIZE		MINIMUM RECOMMENDED SIZE ('L' X 1)		MAXIMUM RECOMMENDED SIZE ('L' X 5)	
		BORE DIAMETER ('LD' MIN.='L' X 2)	BEARING RADIUS (LR' MIN.='L'X1)	BORE DIAMETER ('LD' MAX.='L' X 10)	BEARING RADIUS ('LR' MAX.='L'X5)
'W'	'L'	'LD' MIN.	'LR' MIN.	'LD' MAX.	'LR' MAX
12	24	48 + 0.0168 - 0.0000	24 + 0.0000 - 0.0084	240 + 0.0840 - 0.0000	120 + 0.0000 - 0.0420
15	30	60 + 0.0210 - 0.0000	30 + 0.0000 - 0.0105	300 + 0.1050 - 0.0000	150 + 0.0000 - 0.0525
20	40	80 + 0.0280 - 0.0000	40 + 0.0000 - 0.0140	400 + 0.1400 - 0.0000	200 + 0.0000 - 0.0700
25	50	100 + 0.0350 - 0.0000	50 + 0.0000 - 0.0175	500 + 0.1750 - 0.0000	250 + 0.0000 - 0.0875
40	80	160 + 0.0560 - 0.0000	80 + 0.0000 - 0.0280	800 + 0.2800 - 0.0000	400 + 0.0000 - 0.1400
50	100	200 + 0.0700 - 0.0000	100 + 0.0000 - 0.0350	1000 + 0.3500 - 0.0000	500 + 0.0000 - 0.1750
75	150	300 + 0.1050 - 0.0000	150 + 0.0000 - 0.0525	1500 + 0.5250 - 0.0000	750 + 0.0000 - 0.2625
100	200	400 + 0.1400 - 0.0000	200 + 0.0000 - 0.0700	2000 + 0.7000 - 0.0000	1000 + 0.0000 - 0.3500
125	250	500 + 0.1750 - 0.0000	250 + 0.0000 - 0.0875	2500 + 0.8750 - 0.0000	1250 + 0.0000 - 0.4375
150	300	600 + 0.2100 - 0.0000	300 + 0.0000 - 0.1050	3000 + 1.0500 - 0.0000	1500 + 0.0000 - 0.5250

Last update: 2021-02-19

4 Radial Air Bearings - Uses and application illustrations with detailed descriptions

Radial bearings have many potential applications. By ganging bearings together, any number of goals can be achieved through the use of New Way's radial concave and convex bearings. This paper seeks to show some of the iterations possible through illustration. However, there is probably no end to the types and number of application configurations possible.

Rings often have relatively large spinning diameters, resulting in large centrifugal forces and loads to bearing mounts on the ring, especially loads that are not evenly distributed around the circumference. These centrifugal forces can change the shape of the ring. Even balanced loads that are not uniform can change the shape of the ring. Care should be given in the design of the spinning artefact constraint system in anticipation of this.

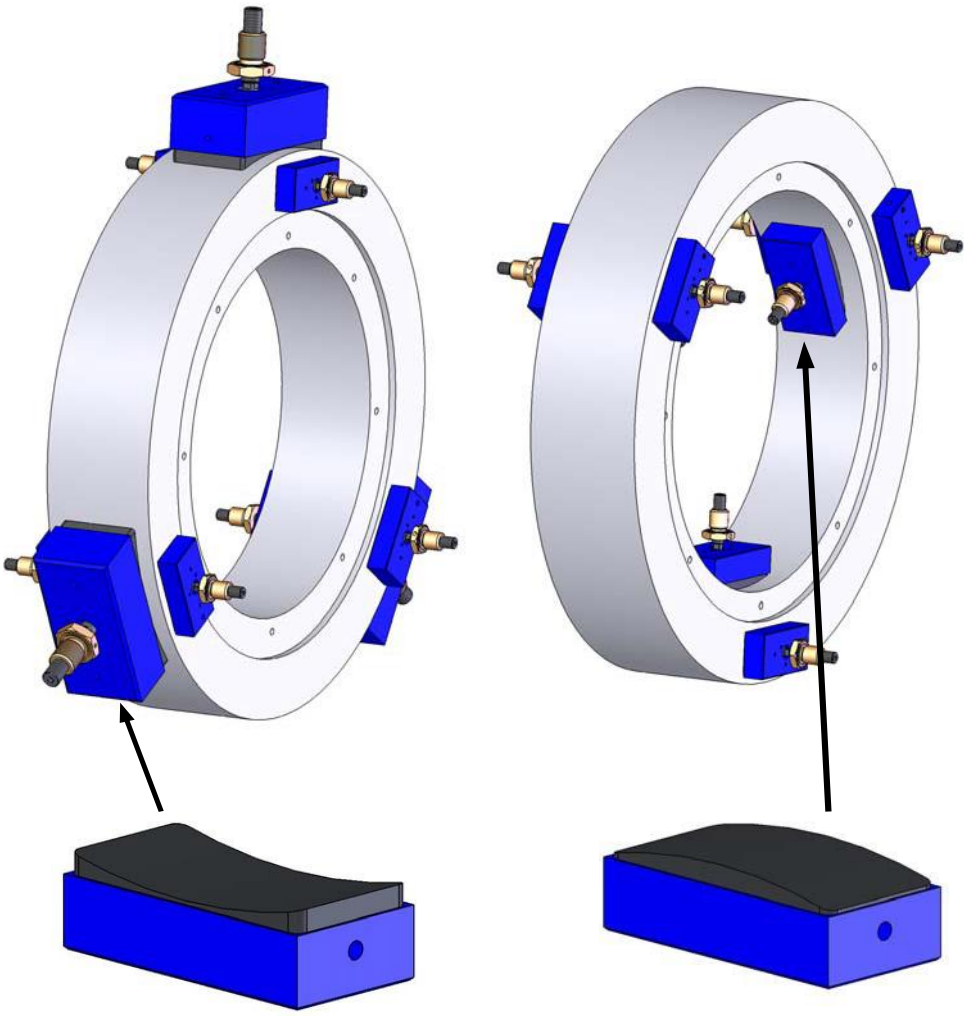

Concave bearings can be used when there is a desire to run on the Outer Diameter of a ring, or other artifact. The curve cut onto the bearing can be lengthwise (Shown) or across the width of the bearing. (Not shown)

Convex bearings can be used when there is a desire to run on the Inner Diameter of a ring.

(not shown in diagram)

Last update: 2021-02-19

Uses and application illustrations with detailed descriptions

BEARING LENGTH X BEARING WIDTH X NO. OF BEARINGS X INPUT PRESSURE X .4 = IDEAL LOAD

For these reasons, care should be taken in calculating the load bearing capacity of the radial bearings.

The load is calculated based on the projected area of the bearing face.

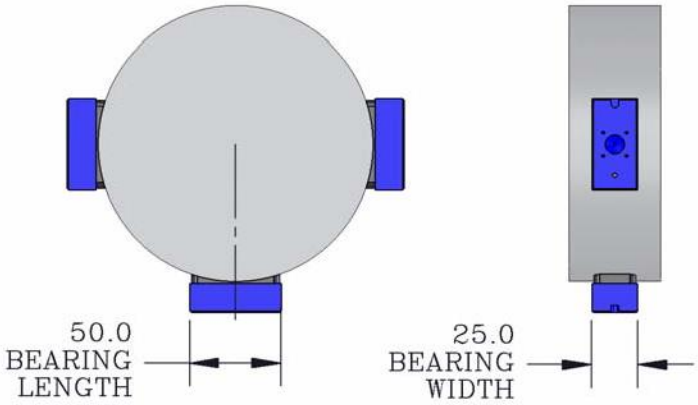

50MM X 25MM X 1 X .41 MPA X .4 = 205 NEWTONS IDEAL LOAD

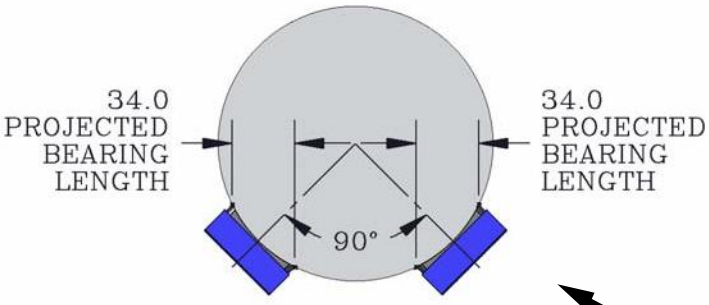

34MM X 25MM X 2 X .41 MPA X .4 = 279 NEWTONS IDEAL LOAD

These bearings have a higher load capacity than the bearings in the bottom illustration.

The load bearing capacity of the bearings will vary depending on the orientation to the load and the tolerances of the bearing and artifact. See page 27 for a note on Tolerances.

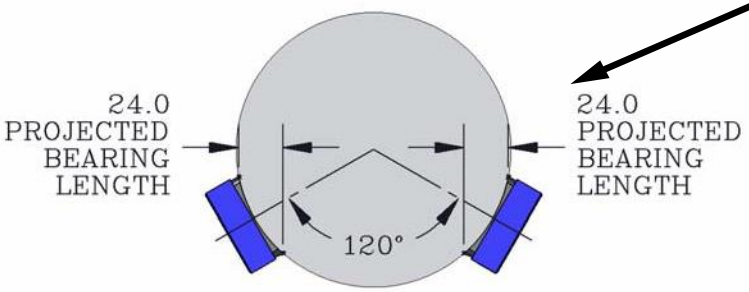

24MM X 25MM X 2 X .41 MPA X .4 = 197 NEWTONS IDEAL LOAD

Last update: 2021-02-19

Uses and application illustrations with detailed descriptions

BEARING LENGTH X BEARING WIDTH X NO. OF BEARINGS X INPUT PRESSURE X .4 = IDEAL LOAD

For these reasons, care should be taken in calculating the load bearing capacity of the radial bearings.

The load is calculated based on the projected area of the bearing face.

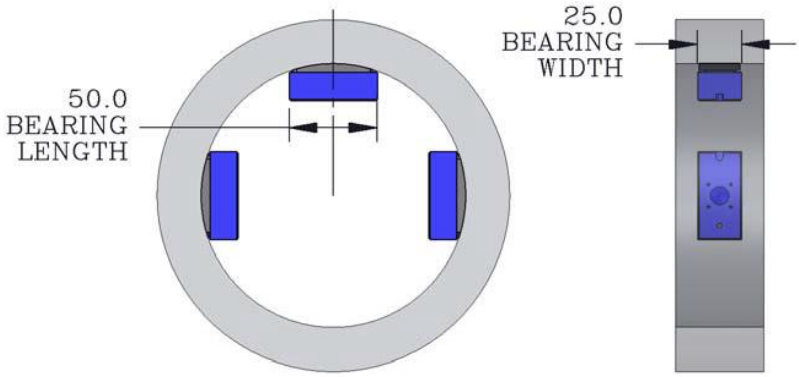

50MM X 25MM X 1 X .41 MPA X .4 = 205 NEWTONS IDEAL LOAD

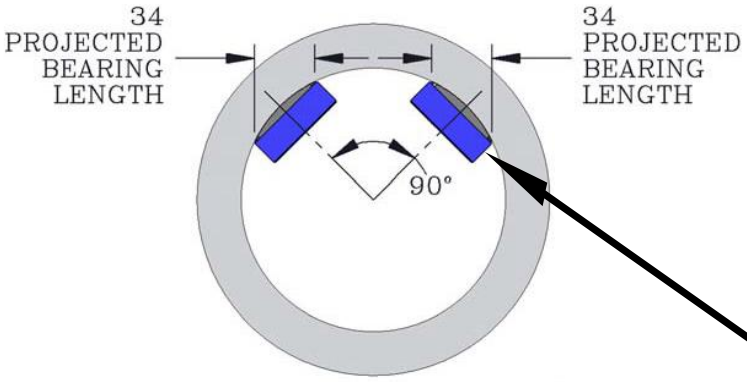

34MM X 25MM X 2 X .41 MPA X .4 = 279 NEWTONS IDEAL LOAD

These bearings have a higher load capacity than the bearings in the bottom illustration.

The load bearing capacity of the bearings will vary depending on the orientation to the load and the tolerances of the bearing and artifact. See page 27 for a note on Tolerances.

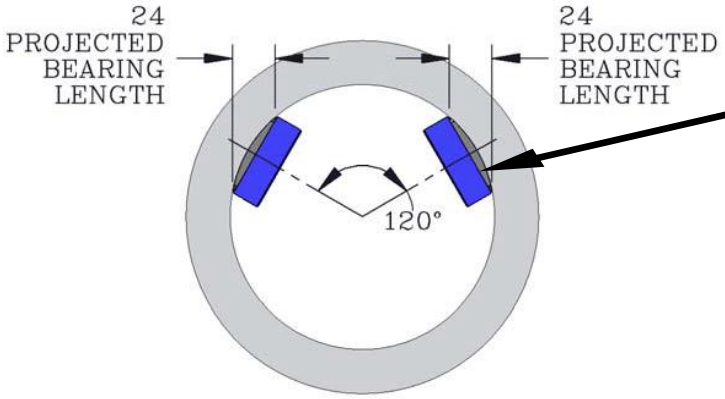

24MM X 25MM X 2 X .41 MPA X .4 = 197 NEWTONS IDEAL LOAD

Last update: 2021-02-19

Uses and application illustrations with detailed descriptions

By utilizing the concave detail lengthwise on the bearing, numerous applications and shaft options are available.

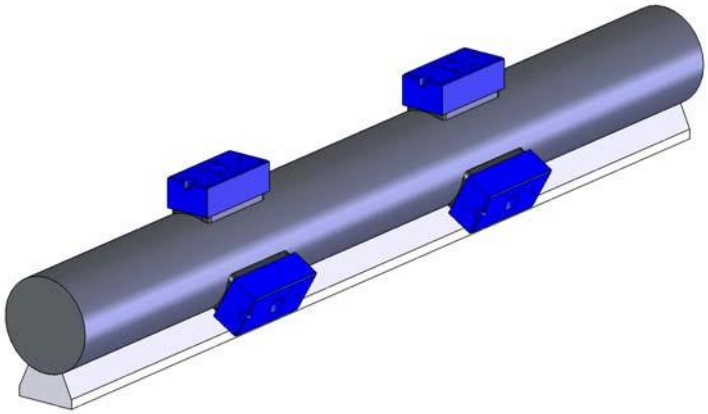

Here the shaft is able to slide axially, as well as rotate – all without friction. This is a demonstration unit that New Way has constructed to show the benefits of Radial Air Bearing technology. Please call IBS Precision Engineering for more information and details.

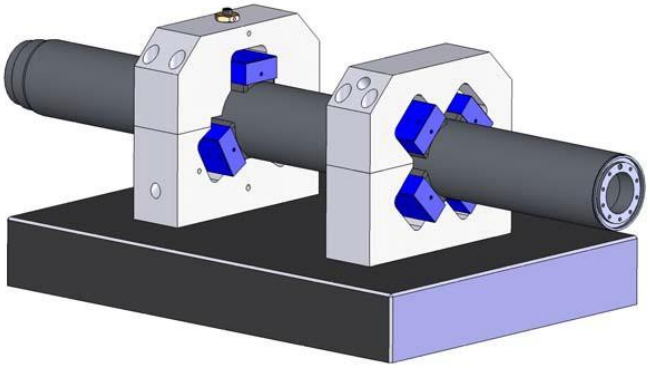

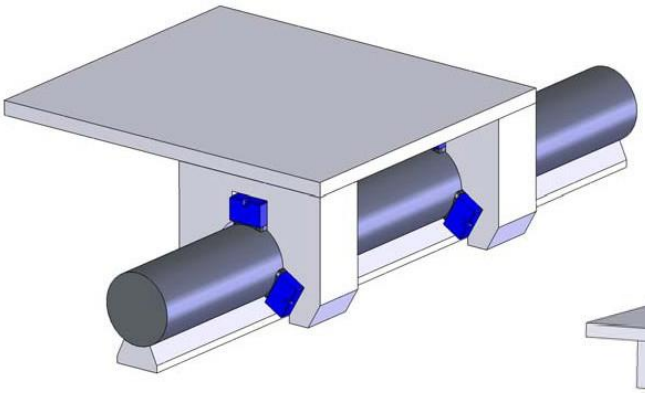

Through the use of commonly available ¾ shafting, simple and cost effect linear motion slides and ways can be fabricated.

The two views shown at left illustrate the use of an air bearing on the top of the shaft, which would deliver the greatest amount of load bearing capacity.

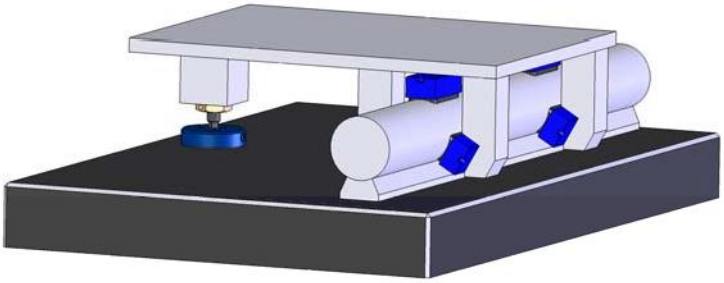

Last update: 2021-02-19

Uses and application illustrations with detailed descriptions

By incorporating a magnet, a preload condition can be created on the lengthwise radial bearings.

This would be beneficial in applications involving the need for precise fly height of the table, relative to the shafting. Something to keep in mind; The magnet should be long enough to span any bolt holes that might be in the top of ¾ shafting.

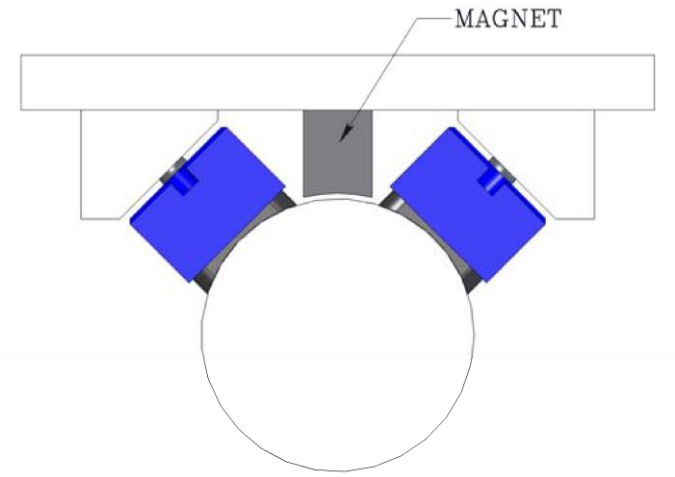

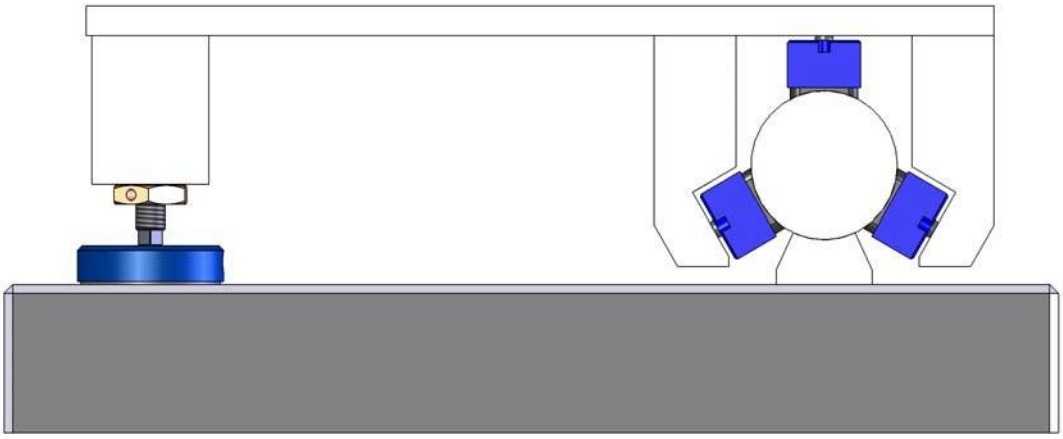

A further embodiment shows a bearing on the top of the rail, and a Puck type air bearing, which New Way pioneered – coupled together to create a kinematically designed linear way table. One would not want to use two rails in parallel, because the unit would be over constrained, where one rail would be fighting the other rail – since creating parallel artifacts in space is difficult.

Shown at left, the system illustrated does not need to be mounted on a granite block, merely a surface flat enough for the Puck type air bearing to ride upon, say > 5µm.

Last update: 2021-02-19

Uses and application illustrations with detailed descriptions

By incorporating Lengthwise bearings on the shafting of drums, a non-contact zero friction drum assembly is possible. Using Puck type bearings at the ends of the shafts, constrains the drum axially.

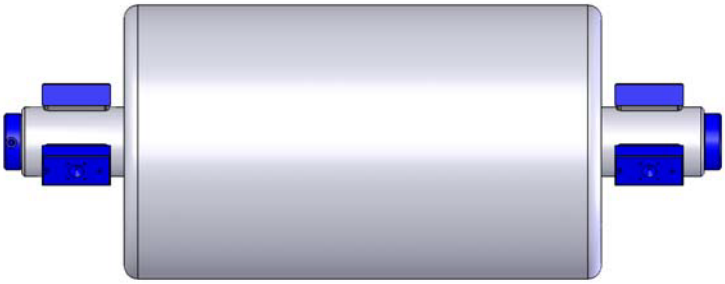

CENTERED ON END OF SHAFT

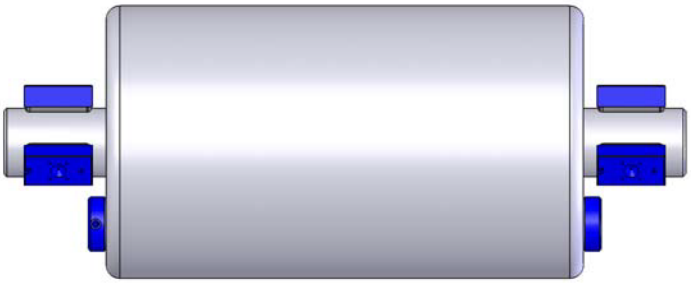

END FACE OF ROLL

THRUST PLATE ON JOURNAL END

The above embodiments make possible the deflection of the drum and shafting, without affecting the orientation or relationship of the air bearings to the surface of the artifact. Since the bearings are mounted with ball type fixture mounts, they are able to articulate and self-align to the deflecting shaft. This could be of particular importance in critical applications.

Last update: 2021-02-19

Uses and application illustrations with detailed descriptions

When spinning discs or shafts, a bearing on the top of the artifact can act as a pre-load, to the bottom load carrying bearings.

Care should be exercised when using more than one bearing as a pre-load, so as not to over constrain the assembly. By using a spring loading mechanism, or a pneumatic cylinder as a mounting support, this can be avoided.

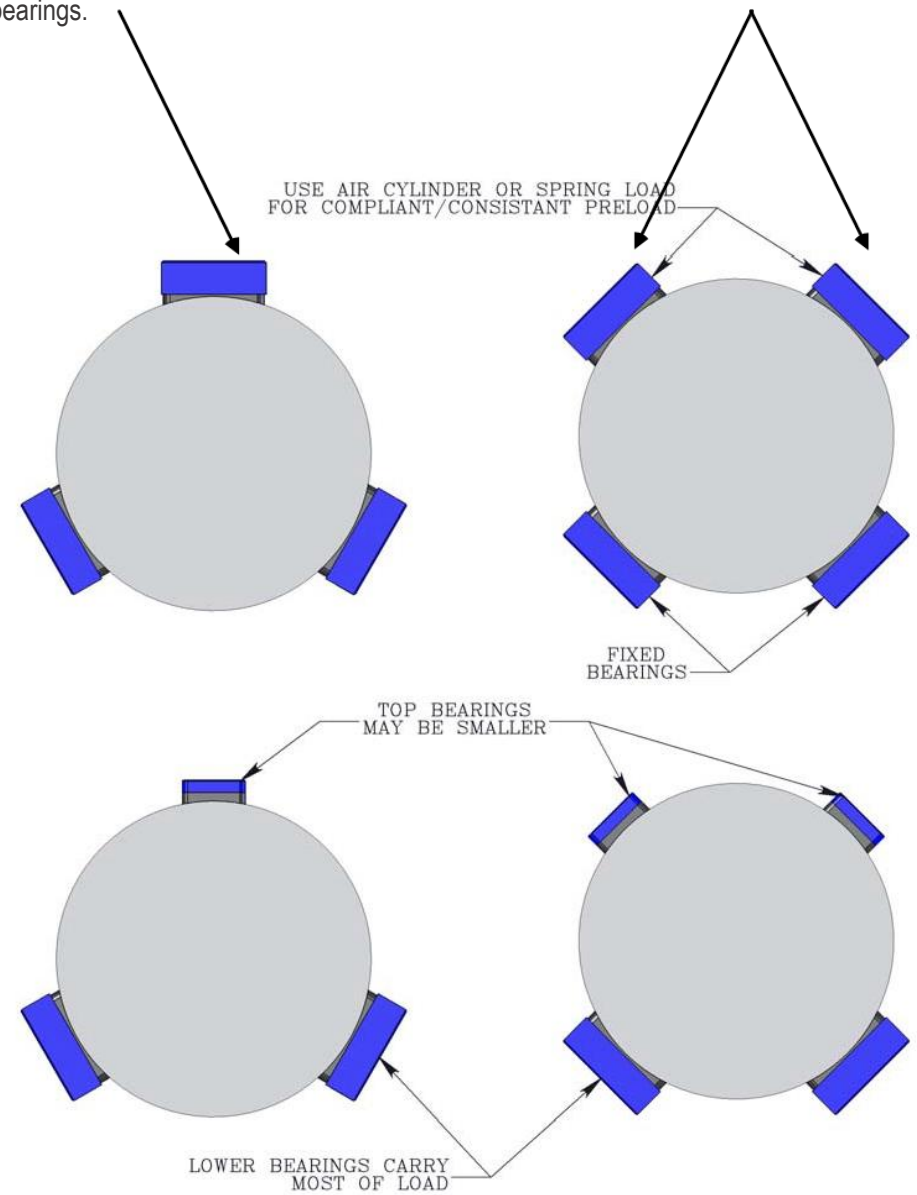

Often, the weight of the artifact can act as a proper amount of pre-load. This helps to save on the number of bearings, and increases the simplicity of the embodiment.

Last update: 2021-02-19

Uses and application illustrations with detailed descriptions

Very large shafts or cylinders can be easily rotated through the use of air bearings.

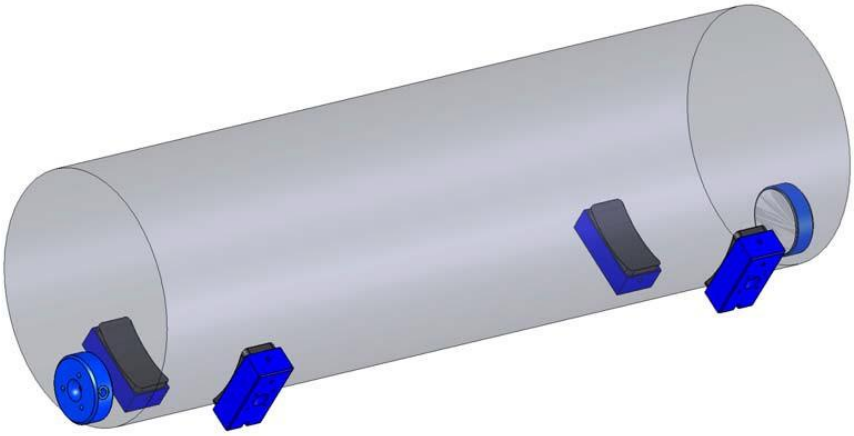

Very large drums or molds can be precisely rotated off of their ID or OD surfaces.

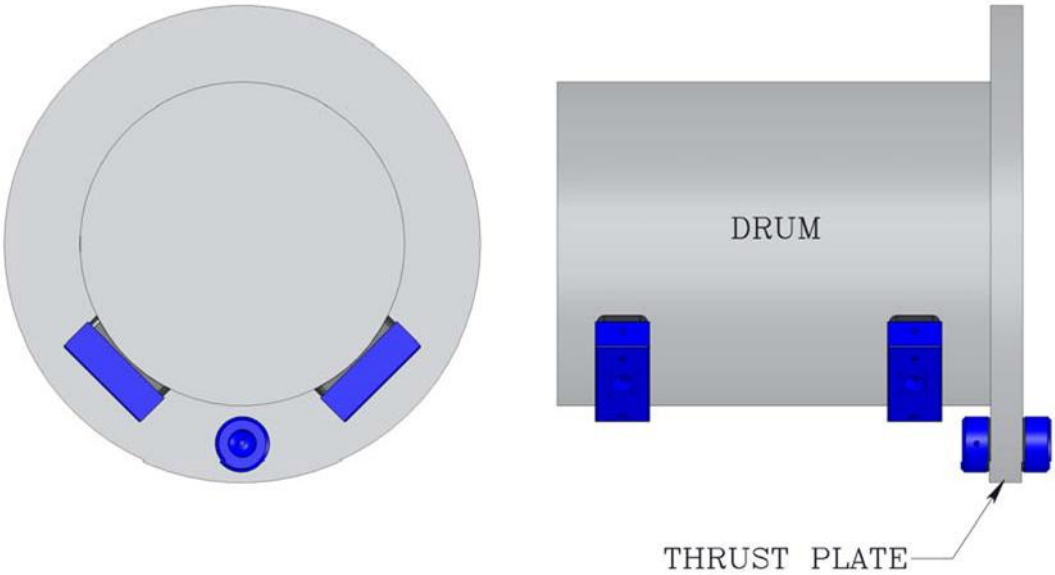

Last update: 2021-02-19

Uses and application illustrations with detailed descriptions

When spinning discs, a plane can be defined through the use of three bearings, in keeping with the exact constraint theory.

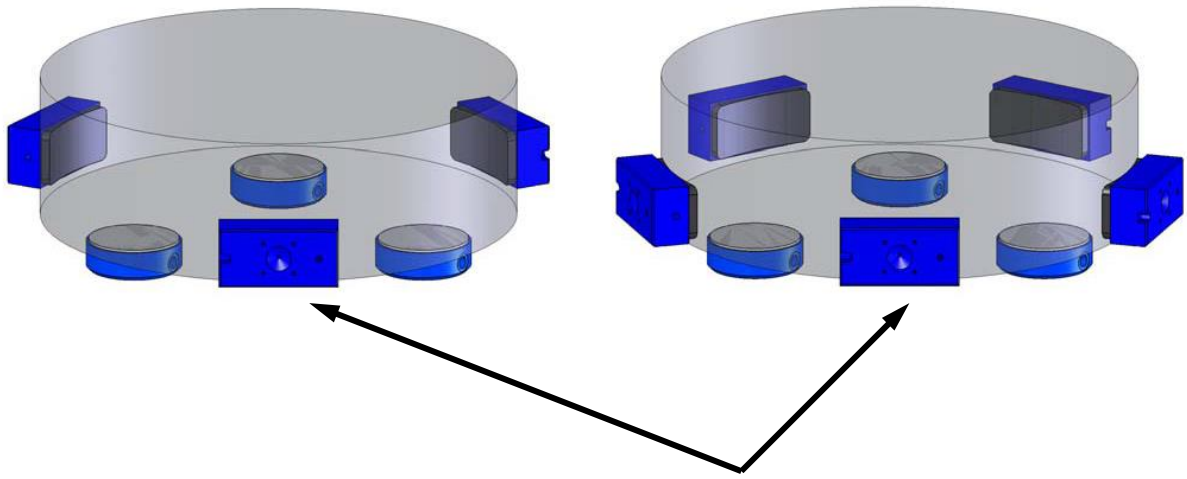

The use of five radial concave bearings on the outer diameter of these spinning discs is more accurate than the use of three bearings. The reason for this is that an odd number of bearings will improve the error motion of the disc – the more used average out any roundness defects in the artifact, for a more accurate rotation.

NOTE ON TOLERANCES

The tolerances on the bearings are relative to the tolerance on the shafting, or curved surface the bearing is being used on. The more the curved surface deviates from a round shape, the greater the gap that is formed between the curved bearing surface, and the surface of the artifact. When this gap enlarges, there is a greater opening for the air between the air bearing and the artifact to escape. When this happens, the bearing has a lower load bearing capacity, and will ride closer to the artifact. New Way has developed tolerance guidelines to account for this variation. By looking at the different bearing permutations, a suitable factor can be utilized, to ensure that you are able to achieve the level of precision desired or necessary for the intended application.
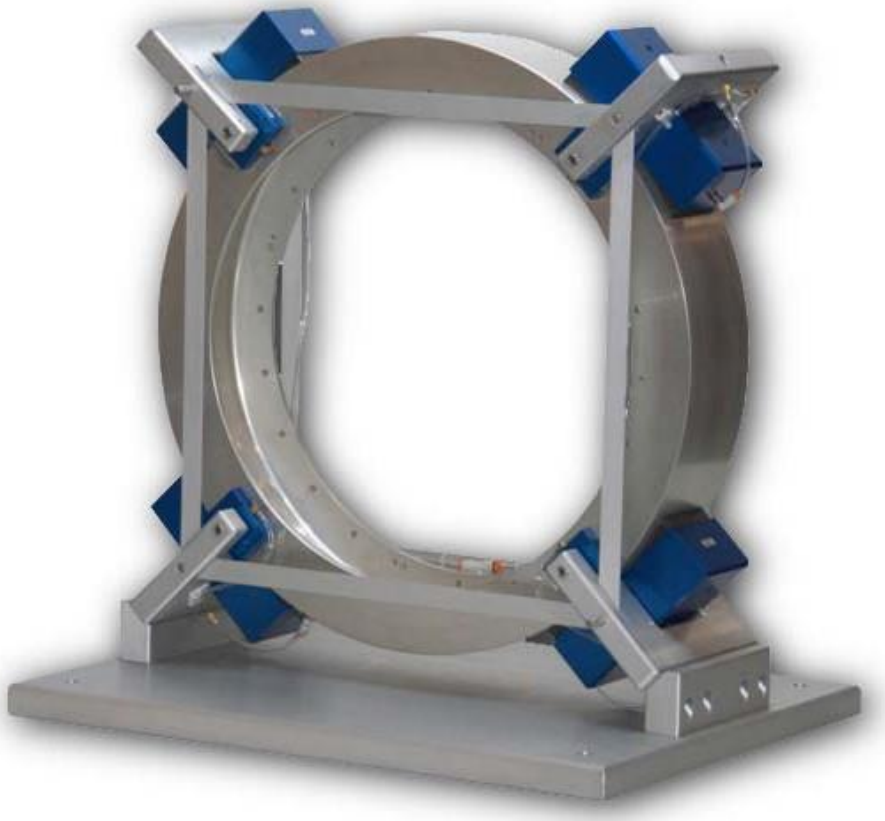
Last update: 2021-02-19